WHITE PAPER

Integrated Vehicle Health Management of a Transport Aircraft Landing Gear System

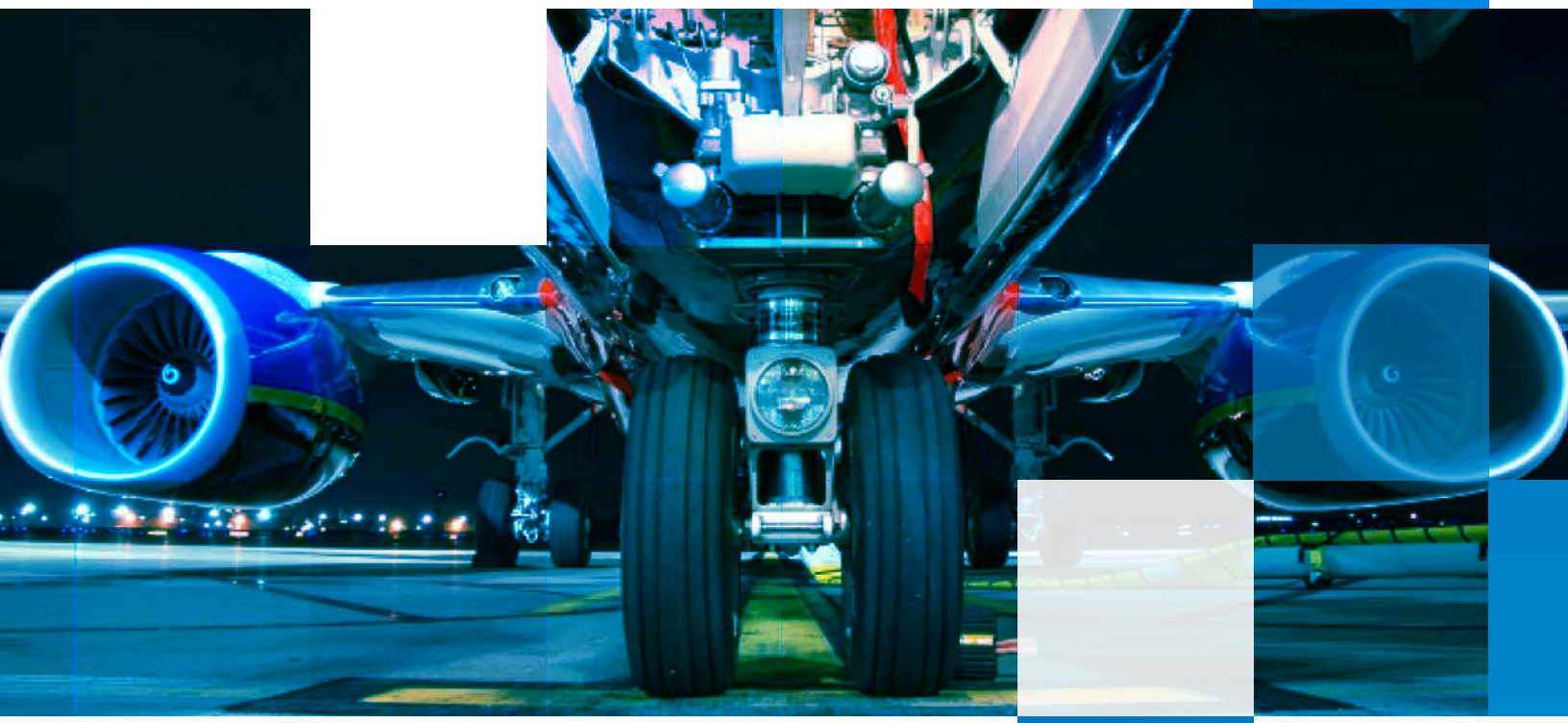

Abstract

Integrated Vehicle Health Management (IVHM) is one of the few technologies that will help in reducing both maintenance and operational costs, while improving the overall safety of an aircraft. It also helps in moving away from conservative design philosophies. Hence IVHM is increasingly being adopted in various aircraft programs. IVHM requires a multi-disciplinary approach bringing together the best of mechanical engineering, sensor technologies, communication and data analytics.

Aircraft landing gear (LG) is one of the most critical systems in an aircraft which requires the maximum maintenance effort, next only to the propulsion system. In this paper a solution approach for IVHM of the landing gear system for a typical transport aircraft is presented. Application is demonstrated through a typical use case of the landing gear retraction mechanism.

Infosys®

Introduction

Aircraft health monitoring system as a concept stems from challenges to enhance flight safety and at the same time to reduce operational and maintenance costs. A system that enables automatic detection, diagnosis, prognosis and mitigation of adverse events arising from component failures, is conceptualized in an Integrated Vehicle Health Management (IVHM) system. The current practice of scheduled maintenance increases the cost of maintenance steeply, especially in the case of an aircraft operating beyond its designed service life. So a need exists to adopt condition based maintenance (CBM) which is possible only with an effective health monitoring system. CBM enables increased asset availability and hence a higher return on investment while ensuring safety.

The aim of a Health Monitoring system is to detect and diagnose initiation of any defect, to analyze its effects and to trigger maintenance workflows in order to maintain safety of the aircraft. This is done by capturing data by a network of sensors and analyzing the data using life prediction algorithms implemented on highly evolved software systems.

Health monitoring systems are employed on both structures and systems. Structural health monitoring essentially looks after structural integrity by online monitoring of damage growth and assessing remaining usable life (RUL). System health monitoring looks after functional aspects and any degradation in performance triggering maintenance tasks or replacement of affected Line replacement units (LRU). In recent times IVHM systems have been developed that take care of both structural and systems health management in aircrafts. In this paper, a study performed on the Health Monitoring system for a retractable landing gear of a transport aircraft is presented.

External Document © 2015 Infosys Limited

Landing Gear system and its Failures

A typical light transport aircraft fitted with a tricycle type retractable landing gear [1-2], with telescopic legs incorporating oleo pneumatic shock absorbers, is the subject of this study. The nose gear leg, as given in Figure 1, carries twin wheels and is hinged in a fuselage fitting. It is supported by a drag stay cum retraction jack on the rear side. The jack is hydraulically operated to extend and retract the gear forward into the fuselage. The bay is covered by a door which is opened and closed by a hydraulic door jack. The nose gear is also fitted with hydraulically operated steering system.

Each of the main landing gear leg (Figure 2) carries single offset wheel on the outboard side and is hinged in a wing fitting. It is supported on the inboard side by a side stay cum retraction jack. The jack is hydraulically operated to extend and retract the gear sideways into the wing.

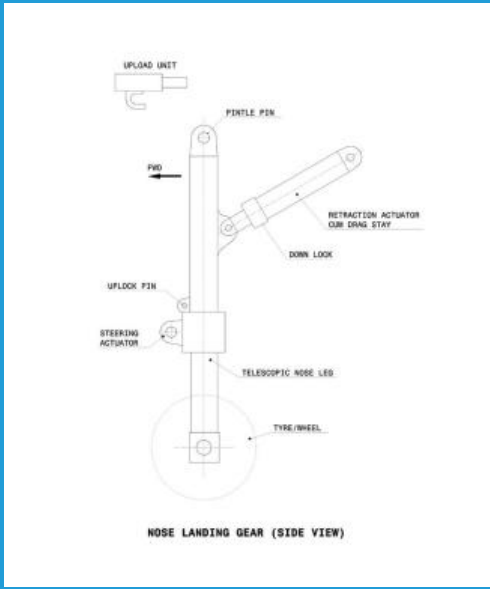

Fig. 1 Nose Landing Gear – Side View

Fig. 2 Main Landing Gear – View Forward

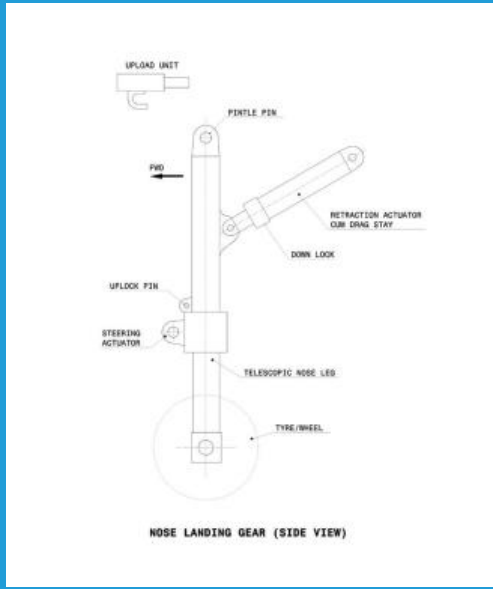

External Document © 2015 Infosys Limited

A typical hydraulic circuit diagram of a landing gear normal operation is shown in Figure3.

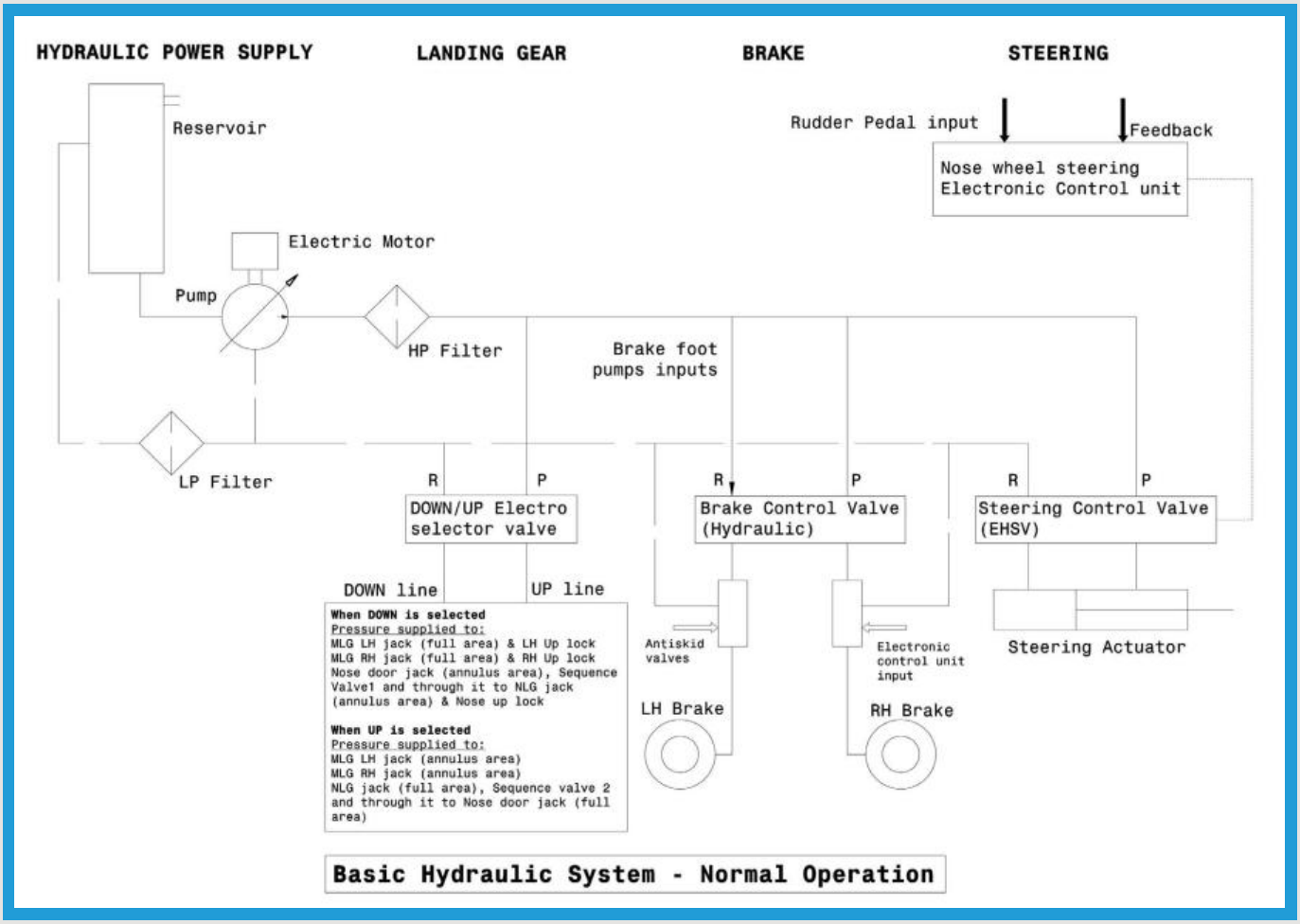

Fig. 3 Basic Hydraulics System – Normal Operation

In order to validate the IVHM system functionality the complete landing gear operating system can be rigged up in a ground test rig with all LRU's located as in the aircraft. This test rig should facilitate extension and retraction and locking of the landing gears, actuation of nose door and nose wheel steering system. Proper installation and rigging is also important for correct functioning of the LG system.

The health of a system depends on the proper functionality of each LRU in the system. An LRU can have many failure modes and potential failure can be detected through symptoms. While some failure modes can be critical, others may only degrade the performance. A failure can be classified as:

a) Incipient - hard to detect
b) Slow progressive – hard to detect
c) Intermittent
d) Cascading
e) Fast progressive

Systems health is monitored as deviations from expected values of parameters. The life of an LRU is specified by number of duty cycles on account of wear and tear or by calendar life on account of presence of perishable items like rubber components. It is important to keep a record of the endurance cycles or calendar life including shelf life while monitoring the LRU's. The health monitoring system should give advance warnings about replacement of such LRU's.

Few probable failures of a landing gear system are:

1. Failing to retract
2. Failing to extend
3. Failing to get up-locked after retraction
4. Failing to get down-locked after extension
5. Exceeding retraction/ extension time limits
6. Failing to give indications in cockpit of down locking, transit and up locking

External Document © 2015 Infosys Limited

IVHM System Architecture

The key objective of a robust IVHM system is to continuously monitor all components and the system as a whole, acquire data, collate component states with other relevant aircraft parameters and report threshold-exceeds to trigger maintenance and other operational workflows.

The key criteria that an IVHM system needs to satisfy are:

1. Interoperability with existing avionics, Electronic Log Books
2. Pluggable System, easy to deploy
3. Less hindrance to existing aircraft structures
4. Optimal weight and shape of extra sensors and hardware
5. Aviation grade hardware and software components
6. Compliance
7. Modularity and Scalability
8. Reliability
9. Security
10. Certification

An IVHM system can be designed to trace, track and monitor each individual component or an LRU of a Landing Gear Unit, through the various stages of the product life cycle namely Design, Manufacturing, Distribution, In Service, and End of Life. The current design approach discusses IVHM, restricted to the phases of Aircraft Assembly, in-service operations through End of Life, as the aircraft design and manufacturing house in the current context, is presumed to procure components and LRUs from different suppliers.

Each LRU or component should be given a unique identity throughout its lifecycle. The identification can be done by RFID tagging of the LRU or component, or by physical attachment [3]. As we see in a subsequent section, an LG attains different health characteristics with the replacement of an LRU or a component and hence the constitution and hierarchy of all LRUs and components at a given time in the LG needs to be recorded. Ideally, an IVHM system should treat a LG as a different instance even if one component or LRU gets replaced due to maintenance activities. Hence the state and health condition of an LG is always a function of the collection of all LRU and components. All such Components and LRU identities will be tracked in the ground based Serialization ERP systems.

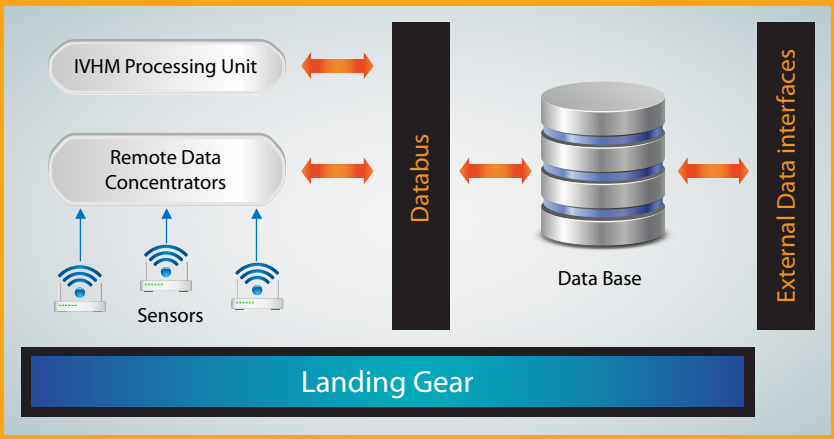

Fig. 4 On Board IVHM System

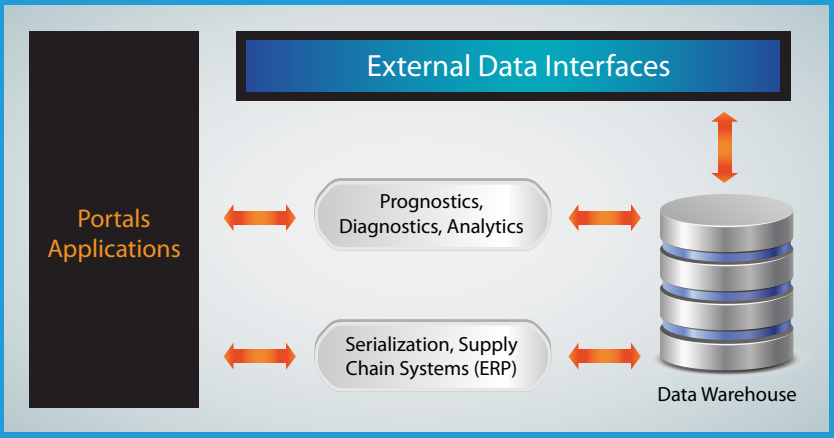

Fig. 5 Enterprise IVHM System

External Document © 2015 Infosys Limited

The diagram shown in Figure 4 depicts a suggested IVHM architecture segregating ground and onboard systems. This IVHM system is a combination of a near real time system on board and a highly scaled Enterprise IT system on the ground. In the current approach, the on board system is recommended to be implemented as a separate pluggable system on dedicated hardware, with minimal, need based interoperability with the main avionics of the aircraft. The IVHM is designed for condition monitoring, limited to aiding Operations & Maintenance (O&M). IVHM requirements may scale up and may mandate collection of data at frequencies more than 1 KHz. The power source for such a unit may have to be tapped from existing power modules or the power modules may have to be redesigned to support the additional loads that the IVHM system would introduce.

At the minimum, the on board IVHM system is visualized as containing the following components:

1. A collage of sensors carefully selected and strategically placed on the LG system.
2. One or more Remote Data Concentrator that aggregates all sensor data through the required interfaces
3. A central computer of the onboard IVHM (IVHM PU) with nonvolatile memory in it
4. A relational database running on possibly an NVRAM
5. A data bus local to the IVHM system
6. An external interface for data collection by ground systems (Wired, Wireless, Serial etc.)

The onboard IVHM system will interact minimally with other avionics systems, for example, to fetch complementary data and parameters for e.g., the CG location of the aircraft.

The ground systems would comprise many robust Enterprise modules (Figure 5) based on processing required to be performed on the aircraft data.

1. Prognostics and Advice Generation
2. Trace and Track LG and its LRUs, components, parts
3. Integration with O&M ERP systems
a. Schedule maintenance based on the condition, raise tickets etc.
b. Supply chain availability, Integration with Order Management System to to ensure scheduled maintenance
4. Portal and Interfaces for data presentation to the Airline and the OEM.

Structural Architecture

Introduction of IVHM into an aircraft may require structural modification to accommodate new sensors, hardware, communication buses etc. The following key criteria have to be borne in mind while introducing a "foreign component" into the aircraft to enable a new IVHM system.

1. Sensor type and range
2. Installation aspects / orientation
3. Interference/Coupling effects with structure and other systems
4. Effect of failure of sensor/ false outputs

The sensor type and range is decided based on the parameters to be monitored. The installation may call for some modification to the LRU and is ensured that it does not affect its functioning. Coupling effects and interference to output is minimized by suitable choice of location of the sensor. It should be ensured that sensors are of high reliability and any failure or false outputs should be easily recognizable by the system software by comparison of data.

Logical Architecture

There are different objectives to implementing an IVHM system in an aircraft (and its Landing Gear), main ones being

1. Increased safety,
2. Usage monitoring,
3. Monitoring Component, LRU and System conditions,
4. Estimation of RUL,
5. Aiding Built in test equipment (BITE),
6. Running diagnostics and prognostics

While the above objectives are operational, the ultimate business objective is to reduce manual inspections and periodic maintenance schedules. This introduces a paradigm shift towards introducing Condition Based Maintenance (CBM) in lieu of periodic maintenance and IVHM is built to cater to this important business objective of the aviation industry.

It is increasingly seen that the OSA-CBM standard [4] (www.mimosa.org) is receiving support from the aviation industry and is being adopted for both onboard electronic systems and ground based Decision support Systems. OSA-EAI standard is being leveraged to integrate with ground based Enterprise systems that run the O&M critical Supply Chain, Serialization (for tracking, tracing) modules. Figure 6 depicts the OSA-CBM stack.

While OSA-CBM provides a standard and a well-defined stack for CBM, it also faces certain implementation challenges for onboard systems. The OSA CBM defines the data definitions, communication interfaces and functional aspects in a layered architecture. OSA CBM provides quite an exhaustive collection of XML messages to be exchanged between the functional layers. While it perfectly fits into the ground based systems, XML messages adds to huge overhead of XML tag bytes in on board systems [5]. Hence it may be prudent to design non-XML binary implementation of the messages of all realized layers in onboard systems. Moreover the stack would have to run on Real Time Operating Systems, with the stack completely implemented in the C language, adhering to typical aviation standards of coding guidelines, such as DO-178B/EUROCAE ED-12B.

External Document © 2015 Infosys Limited

The OSA CBM functional layers data acquisition to state detection are good to be fully implemented on on-board systems and Prognostics Assessment, Advisory Generation to be implemented on ground based IT systems. There may be an overlap of Health Assessment being implemented partially in onboard systems and majorly on the ground based systems. Critical Health factors that need immediate attention should be assessed onboard, while the rest can be processed on ground systems.

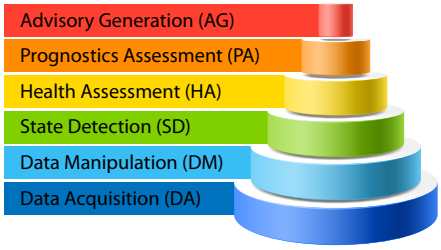

Fig 6. OSA-CBM Stack

Data Acquisition (DA)

Data for LG IVHM comes from various sensors mounted on the LG assembly and LRUs. Complementary data may have to be sourced from other onboard avionic systems, for e.g., the Center of Gravity of the aircraft, Cross wind, Acceleration, Speed, Electrical System Parameters etc. amongst others. A few important parameters to be monitored for health monitoring of landing gear retraction system through the added sensors would be as follows.

Hydraulic pressure in DOWN line

- Hydraulic pressure in UP line
- Electrical signals from Weight-on-wheel switches
- Electrical signals from Up-locks
- Electrical signals from Down-locks
- Pump output pressure
- Retraction and Extension timings
- Oleo gas pressures
- Oleo fescule lengths when aircraft in on ground

Locations and type of sensors will be indicated in the Structural/Physical architecture.

Sensors

The sensors chosen for health monitoring system in aircraft should work well in the aircraft environment and range of temperature, altitude, acceleration, shock, vibration, salt fog, humidity, sand and dust etc. They should be small in size and weight, should be energy efficient. Sensor systems on board an aircraft provide outputs (signals) to intelligent software systems to automatically interpret the sensor outputs. Based on the specific requirements, the most widely used sensors are the fiber optic sensors, ultrasonic sensors,

wireless sensors, non-contact type sensors, Micro electromechanical system (MEMS) and Nano-technology based sensors.

Data Manipulation (DM)

Sensor fusion, Signal processing and other conditioning and marshaling/muddling happen at this layer. This layer will be the primary layer of the OSA CBM stack, where a binary implementation of the message exchange formats and the data structures would be implemented. Feature extractions and corresponding algorithms can also happen at this layer.

State Detection (SD)

A LG state model and state machine as per OSA CBM specification should be implemented in this layer. Fault model implementation also falls into this layer. Any critical change in the profile of the fault data from the collection instances would trigger alerts for cockpit or ground consumption.

The LG state model should be in sync with the Trace/Track serialization component hierarchy of the LG components and the LG system as a whole. Even a single change in the LRU or a LG component would treat the state model instance as a different state for health and condition monitoring aspects. This is due to the fact that certain faults would have cascading effects and faults in the replaced LRU would not be similar to its predecessor. Hence the uniqueness of the constitution of the LG state has to be preserved and recorded.Typically the binary implementation of the DM and SD layers would end here and spew data onto the common bus (may be MIL-1553 kind) and may be stored in a persistent database built on NVRAM modules.

The persistent data is available for download through the external data interface. The external data interfaces could be USB, Ethernet, Wireless or Serial. The data that is exchanged or stored here could be encrypted using different mechanisms.When the data download happens and gets transferred to the ground systems, the binary formats have to be converted to OSA CBM defined XML formats. The data thus collected would go into the DataWarehouse of the ground system which houses the Common Relational Information Schema (CRIS) of the OSA EAI specification.

Health Assessment

A majority of Health Assessment (HA) will happen on the ground systems. Minimal to no HA should happen onboard as this is a computationally intensive operation. Any critical events detected by the IVHM system and not available in standard avionics should only be considered to be detected on board and informed to the main Avionics through the databus interfaces. The Health Assessment module sitting on top of the Datawarehouse would consist of a set of Diagnostics algorithms and processes.

External Document © 2015 Infosys Limited

The HA module should be highly customizable and highly extensible as the prognostics and diagnostics algorithms are ever evolving and new ones are innovated continuously.

The workflow of the HA should also be made graphically available to the IVHM users, so that they can introduce new tests, modify the sequence of tests, parallelize, serialize, introduce logical gates etc. Reuse of Diagnostics and Prognostics algorithms in different HA tests can be made possible.

The diagnostics would determine any exceedances in the values collected, observe the data collected over the flight duration, efficiencies of the LG functions and track any performance degradation against the previous data recorded for the flight, even if threshold breakages are absent.

Any threshold violation and periodic degradation with respect to previous dataset collected is the key output of this module.

Prognostics Assessment

The main responsibility of the Prognostic Assessment (PA) module is to calculate the Remaining Usable Life (RUL) of a component or LRU where defects or degradation has been reported by the HA module.

PA is a sophisticated, complex and most sought after area of research. Established algorithms by using Predictive Modeling, Principal Component Analysis and other techniques should be constantly updated in this system.

Hence the PA module should be highly flexible and should be ready to import new algorithms, schedule PA workflows. The Software architecture should support patching and upgrading this module frequently and let IVHM administrators to dynamically create work flows and schedule PA tests as per the need.

Advisory Generation

The Advisory Generation (AG) Layer is the main Decision Support System (DSS) for the IVHM solution. It accrues the HA and PA findings and generates Health Reports and rosters maintenance activities if integrated with the Enterprise Systems automatically.

Web portals on top of this layer would help both the OEM and Operator to access the IVHM data and results for the flights of interest. The portals would also help an OEM to offer or sell IVHM services to different Airlines to which the aircrafts have been sold or leased.

A Typical Use Case

The Landing Gear Retraction is demonstrated as a practical and simple use case to showcase the proposed IVHM architecture to meet the functional requirement.

External Document © 2015 Infosys Limited

A LG retraction activity is possible only when the following conditions are met:

1. Aircraft hydraulics power and electrical power are 'ON'
2. All Weight-On-Wheel switches are 'OFF'. (When aircraft is standing on the landing gear the oleo will be compressed to that extent. Weight-on-wheel micro-switches are installed in each gear to sense the oleo closure. The switches are 'ON' when the weight is on the landing gear. When any one or more switches are 'ON" the Selector switch lever is LOCKED by a solenoid operated plunger preventing operation of the Selector to UP position.)
3. Select landing gear 'UP' on the landing gear selector switch to energize the electro-selector spool valve to move to 'UP' position.
4. Hydraulic pressure flows to 'UP' lines of actuators.
5. All Down locks are unlocked
6. Actuator stroke retract the landing gears individually.

Thus a failure of retraction can be due to any of the reasons mentioned in Table 1. The main objective of the IVHM system is not to report a failure at the time of failure, but also to give a near practical prognosis of a failure event and estimate RUL or Time to Failure (TTF). Hence the current IVHM solution should present the degradation graph for the eight failures mentioned in Table 1.

Failure	Detection Mechanism	Hardware Availability	Comments
No Hydraulic Power	Sensed by a pressure transducer in the system	Already available in the current system	Need to get the information from existing avionics sytem
No Electric power	Sensed by system voltage sensor		
Weight on wheel signal failure	Sensed through electrical signal which needs to be tapped		
Failure of Down locks	Sense the signals from Down locks		
Gear unlocked, but not going up to up lock	Sense signal from Up lock		
Retraction failure	Time intervals between selector switch operation, down lock release and up locking for each gear is beyond limits		
Electro-selector switch failure	Identify through solenoid voltage	New sensor need to be deployed	New data to be captured
Electro-selector valve failure	Identify through pressure in 'UP' line		

Table 1 Landing Gear Failure Modes and detection mechanism

The state detection layer (SD) will implement the whole state model containing all the pressure and electrical parameters and establish correlation relationships between them. For example, a drop in hydraulic pressure or a low voltage may cause the unlocked LG not to reach the uplock position or a delayed retraction. The effects of combination of both conditions under various amplitudes would be different. The algorithms will have to learn the inter dependency of such parameters accurately to help the next layer while performing HA.

Health Assessment onboard will be simple and the algorithms are based on threshold exceedances during service. The HA algorithms on ground based systems would be more complex combining Information gain and decision making modules. On the domain side the HA would also have a database of material behaviour, historical data and built in self learningcapabilities.

The Advisory Generation module will implement probability calculation algorithms and when the probability of a functionality reduces below 100%, on a time scale, maintenance advisories are generated, for example, when the probability of the uplock functionality based on the historical and current data sensed is about to drop or drops to less than 100%, a maintenance need is triggered.

External Document © 2015 Infosys Limited

Conclusion

Integrated Vehicle Health Management (IVHM) is increasingly being adopted in various aircrafts encompassing both systems and structures. Aircraft landing gear system is taken for the current study due to its criticality next only to a propulsion system. A solution approach for Integrated Vehicle Health Management (IVHM) for landing gear system of a typical transport aircraft is presented. This end to end solution approach considers both aircraft OEMs and airliners. The system architecture details out various components like track and trace, structural architecture, logical architecture, data acquisition, sensors, data processing, state detection, assessment of health and prognostics. The solution approach is demonstrated through a typical use case of the landing gear retraction mechanism. Infosys has been working actively in this area bringing together best of its capabilities in mechanical product development, sensor technologies, communication, data analytics and software systems engineering. Many advanced technologies are continuously being developed in health monitoring which is making it relevant to multiple industry domains.

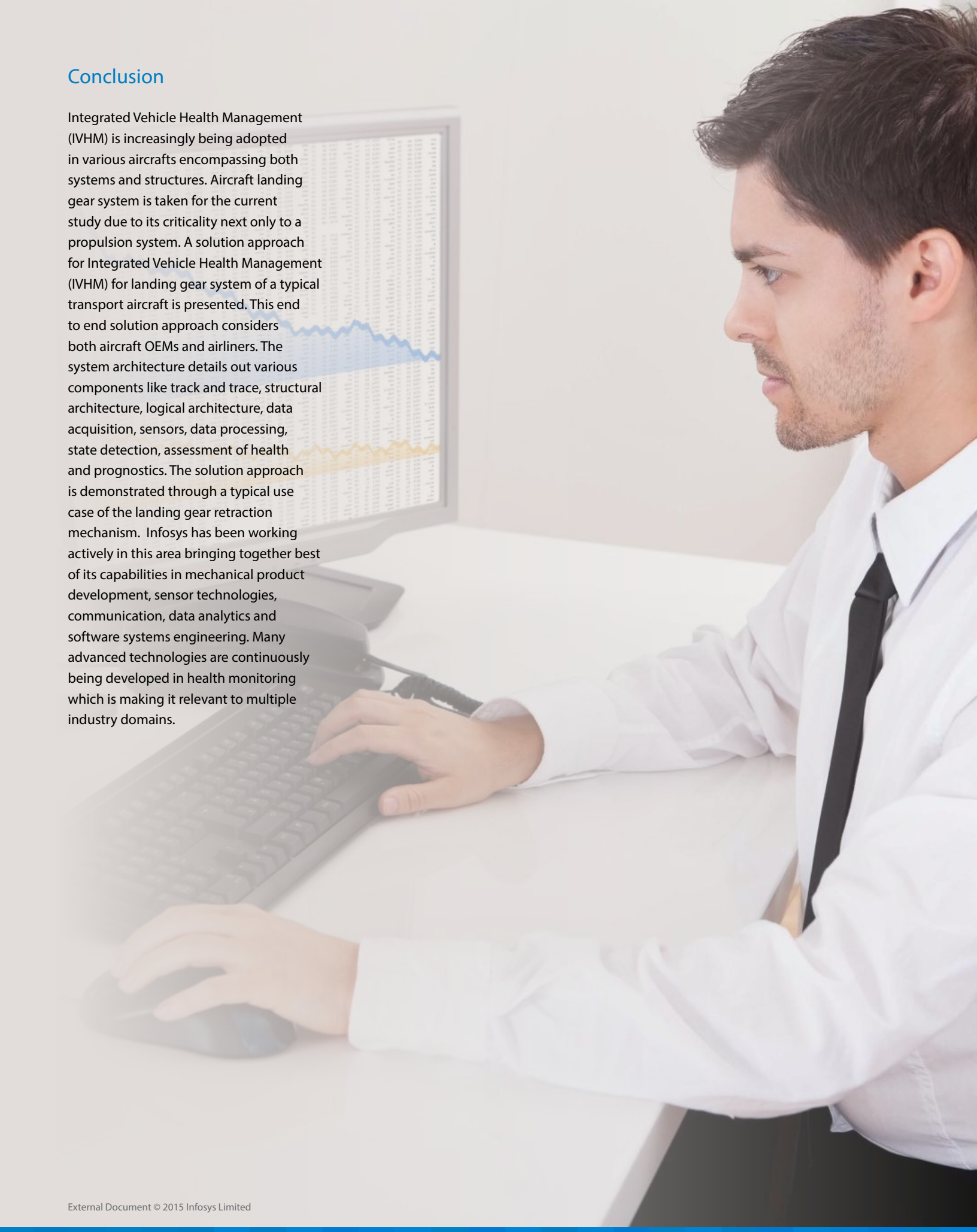

External Document © 2015 Infosys Limited

References

1. Jan Roskam, Airplane Design Part IV – Landing gear design, 1986

2. Norman S. Curry, Aircraft Landing Gear Design: Principles and Practices, 1988

3. Patkai, B., Theodorou, L., McFarlane, D. and Schmidt, K., Requirements for RFID based Sensor integration in Landing Gear IVHM, AUTO-ID LABS AEROID-CAM-016, 2007,http://www.aero-id.org/research_reports/AEROID-CAM-016-MessierDowty.pdf [Accessed on Aug 25, 2012]

4. Operations and Maintenance Information Open Systems Alliance, http://mimosa.org/ [Accessed on Aug 25, 2012]

5. Andreas L., Conor H. and Matthias B., Data Management backbone for embedded and pc based systems using OSA CBM and OSA EAI, European Conference of Prognostics and Health Management Society, 2012.http://www.phmsociety.org/sites/phmsociety.org/files/phm_submission/2012/phmc_12_015.pdf [Accessed on Aug 25, 2012]

Acknowledgements

The authors would like to thank Prof. K. P. Rao, Mr. T G A Simha and Mr. Jagadish V. P. for their critical review of this document and valuable feedback. Mr. Thirunavukkarasu K.S. help in creating the figures is appreciated. The authors also would like to thank senior management of engineering services practice of Infosys Mr. Srinivasa Rao P and Mr. Abhishek for their continuous support and encouragement.

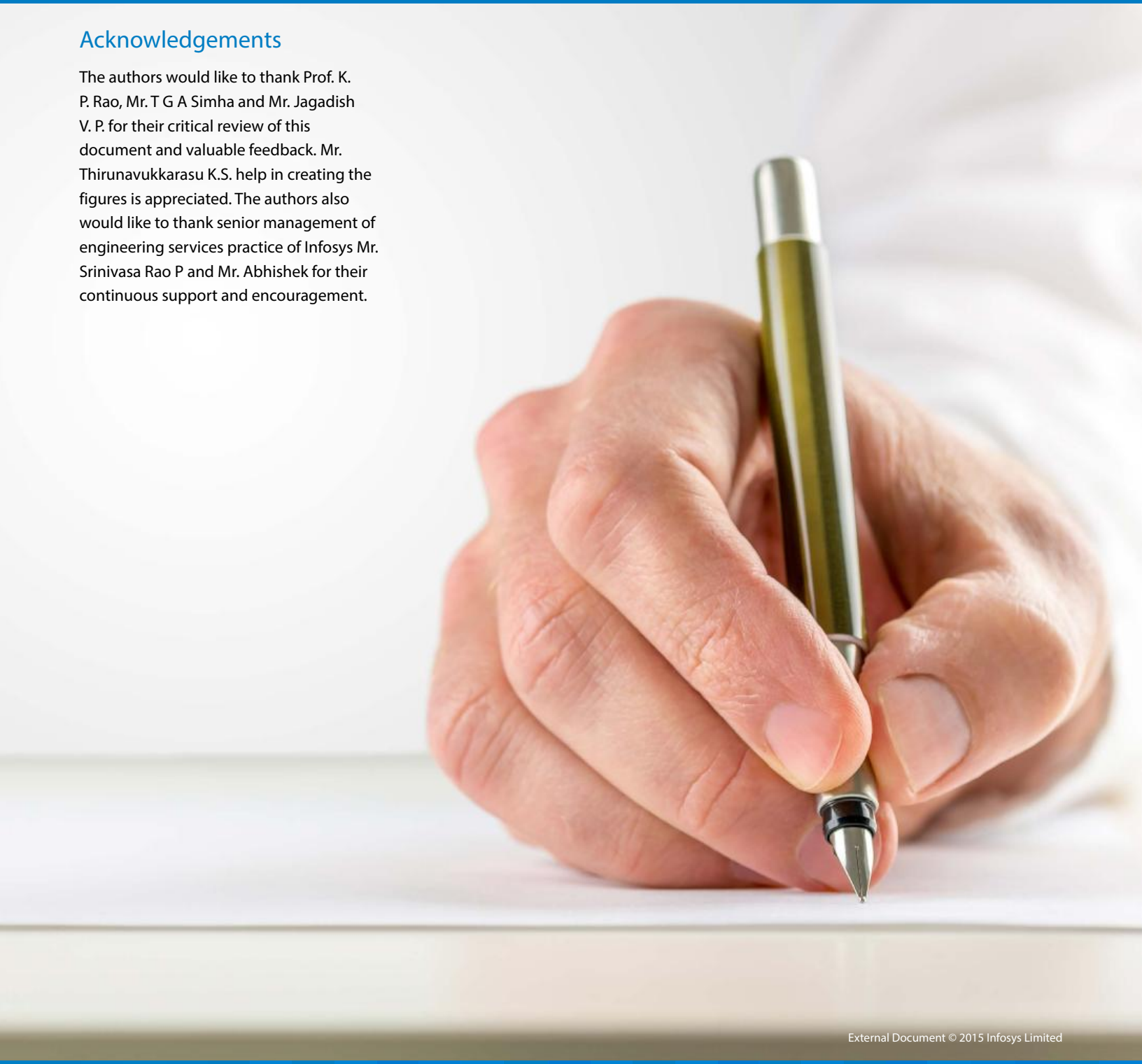

External Document © 2015 Infosys Limited

About the Authors

Divakaran V. N. is a *Consultant* with Infosys since December, 2006. Prior to this, he was with Hindustan aeronautics Ltd at its Aircraft Research and Design Centre as Head of Design (Mechanical systems). He has over 35 years of experience in design and development of landing gears and other mechanical systems, working in military aircraft programs like Light Combat Aircraft, Advanced Light Helicopter, Intermediate Jet Trainer and civil Light Transport Aircraft. He has two patents in design. He took his degree in mechanical engineering from NIT, Calicut and underwent 9 months of institutional training in Aeronautics at Indian Institute of Science, Bangalore.

Subrahmanya R. M. is a *Senior Architect* with Infosys. He has led large programs in the Remote Management, M2M, Service Management, Network Fault Management areas for different industry verticals. He has more than 15 years of experience in engineering software products, from concept to realization. He has filed six patents on the above areas. He is an Electronics and Communication Engineer from PESIT, Bangalore. He has undergone a 1 year training at SERC, IISc, Bangalore prior to joining Infosys.

Dr Ravikumar, G.V.V. is *Senior Principal and Head Advanced Engineering Group (AEG)* brings together 20 years of research and industrial experience in Aircraft Industry. His areas of interest include Aircraft Structures, Knowledge Based Engineering, Composites and Structural Health Monitoring. He authored more than 30 technical papers in various journals/conferences/white papers and filed a patent. He worked on various prestigious engineering design and development, KBE tool development projects for both military and commercial aircraft programs including Indian light combat aircraft (LCA). He obtained his doctoral degree in Applied Mechanics from IIT Delhi. He worked in Tata Research Design and Development Center (TRDDC), Pune and Aeronautical Development Agency (ADA) Bangalore prior to joining Infosys.

About Infosys

Infosys is a global leader in consulting, technology, outsourcing and next-generation services. We enable clients, in more than 50 countries, to stay a step ahead of emerging business trends and outperform the competition. We help them transform and thrive in a changing world by co-creating breakthrough solutions that combine strategic insights and execution excellence.

Visit www.infosys.com to see how Infosys (NYSE: INFY), with US$8.25 B in annual revenues and 165,000+ employees, is helping enterprises renew themselves while also creating new avenues to generate value.

Infosys®

For more information, contact askus@infosys.com www.infosys.com

© 2015 Infosys Limited, Bangalore, India. All Rights Reserved. Infosys believes the information in this document is accurate as of its publication date; such information is subject to change without notice. Infosys acknowledges the proprietary rights of other companies to the trademarks, product names and such other intellectual property rights mentioned in this document. Except as expressly permitted, neither this documentation nor any part of it may be reproduced, stored in a retrieval system, or transmitted in any form or by any means, electronic, mechanical, printing, photocopying, recording or otherwise, without the prior permission of Infosys Limited and/ or any named intellectual property rights holders under this document.